swimming pool heat exchangers

swimming pool heat exchangers

in association with

BOWMAN®

100 YEARS OF HEAT TRANSFER TECHNOLOGY

mdt

www.mdtco.com

Bowman Dominates

Swimming Pool Heat Exchangers

For boilers, solar panels and heat pumps

The ultimate heat transfer performance for pools and spas

When it comes to heat transfer solutions for your pool, Bowman delivers nothing less than optimum performance. Literally tens of thousands of our units are operating efficiently and reliably around the world, from spas and hot tubs to Olympic pools, in both commercial and domestic applications.

Whether your pool uses conventional heating or renewable energy, the unique design and technology of Bowman heat exchangers will help you achieve faster heat-up times while reducing your energy consumption, costs and CO_2 emissions.

Just some of the benefits of choosing a Bowman heat exchanger for your pool

Energy saving
With more heat transfer tubes than most competitor products, Bowman units heat pools up to three times faster, reducing energy costs and saving money.

Easy installation
Our popular EC and FC ranges feature composite end covers and solvent weld connectors for installation directly into pool pipework. Most models also feature an integral 7mm thermostat pocket.

NEW Universal fit end covers
All EC models are now supplied with our NEW 'Universal Fit' end covers, which makes installation even easier – see page 11 for more information.

Simple to maintain
An easily removable tubestack and end covers makes cleaning and maintenance procedures very simple and straightforward.

in the Pool

Outstanding reliability

With a choice of titanium, stainless steel or cupro-nickel tubestacks, there's a Bowman heat exchanger to suit any type of pool water. Designed and built to the highest quality standards, Bowman units provide outstanding levels of operational reliability and durability.

Titanium tube stacks

Titanium is the ultimate 'fit & forget' material for swimming pool heat exchangers. It is capable of withstanding attack from all known chemicals and is suitable for use with any type of pool water. Bowman now offer titanium tube stacks, with a 10 year guarantee, for every model in the range. See page 11 for more information.

Solar and renewable energy

Bowman also offer a range of heat exchangers for solar and renewable energy, for swimming pool owners wishing to reduce energy costs and CO_2 emissions. These units are specially designed to work with the lower temperature water from solar panels or ground source heat pumps and need less energy to heat pools to the required temperature.

BOWMAN®

Swimming Pool Heat Exchangers

for use with boilers

The table below enables the selection of the appropriate heat exchanger and shows the output that can be achieved from our units with different boiler inlet temperatures and swimming pool sizes.

Type	Pool Capacity		Heat Transfer 82°C Boiler Water		Heat Transfer 60°C Boiler Water		Boiler Water Flow		Maximum Pool Water Flow		Weight
	m^3	gal	kW	Btu/h	kW	Btu/h	m^3/h	l/m	m^3/h	l/m	kg
EC80-5113-1C	40	8,800	20	68,000	12	41,000	2.1	35	9.0	150	3.0
EC80-5113-1S/T*	50	11,000	25	85,000	16	55,000	3.0	50	12.0	200	3.0 / 2.7
EC100-5113-2C	80	18,000	40	135,000	22	75,000	2.4	40	10.2	170	4.5
EC100-5113-2S/T*	90	20,000	50	170,000	30	102,000	3.0	50	12.0	200	4.5 / 4.0
EC120-5113-3C	120	26,000	70	240,000	40	135,000	3.6	60	13.5	225	5.5
EC120-5113-3S/T*	130	28,500	80	270,000	46	157,000	4.0	67	15.0	250	5.5 / 4.9
FC100-5114-2C	170	37,000	100	340,000	55	190,000	5.4	90	21.0	350	8.8
FC100-5114-2S/T*	180	39,500	110	375,000	60	205,000	6.0	100	22.8	380	8.8 / 7.8
FG100-5115-2C	230	50,000	170	580,000	100	340,000	7.2	120	28.8	480	16
FG100-5115-2S/T*	250	55,000	190	650,000	110	376,000	8.4	140	33.0	550	16 / 14
FG160-5115-5S/T*	320	70,000	300	1,000,000	170	580,000	9.6	160	39.0	650	29 / 25
GL140-3708-2C	455	100,000	300	1,000,000	170	580,000	12.6	210	50.4	840	30
GL140-3708-2T	478	105,000	320	1,100,000	180	615,000	13.5	225	54.0	900	30 / 27
GK190-5117-3C	660	145,000	556	1,900,000	310	1,060,000	19.2	320	75.0	1,250	57
GK190-5117-3T	750	165,000	630	2,150,000	360	1,230,000	21.6	360	96.0	1,600	51
JK190-5118-3C	1,000	220,000	780	2,660,000	440	1,500,000	28.6	475	114.0	1,900	85
JK190-5118-3T	1,230	270,000	960	3,280,000	540	1,840,000	37.5	625	150.0	2,500	76
PK190-5119-3C	1,500	330,000	1,055	3,600,000	585	2,000,000	44.0	730	175.0	2,900	120
PK190-5119-3T	1,680	370,000	1,170	4,000,000	650	2,200,000	49.2	820	216.0	3,600	106

*Add the appropriate suffix indicating tube material when ordering these part numbers (C, S or T).
C = Cupronickel S = Stainless steel T = Titanium

N.B. Stainless steel heat exchangers should not be used on pools fitted with salt water chlorinators or salt water pools.

The performance capabilities of the heat exchangers are based on achieving a pool water temperature of 30°C.

EC80-5113-1

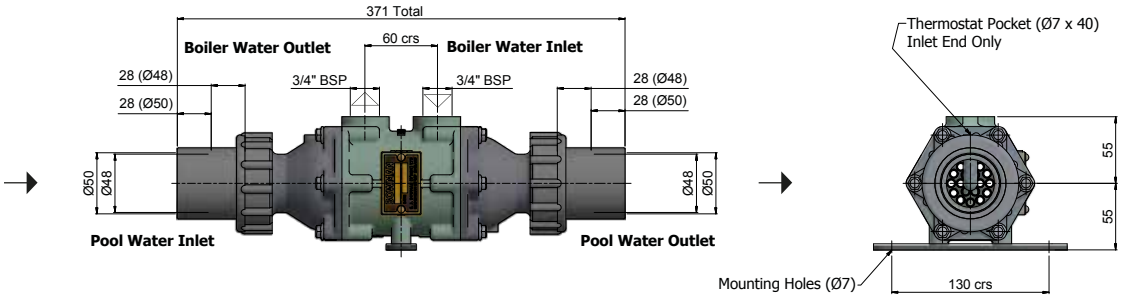

EC100-5113-2

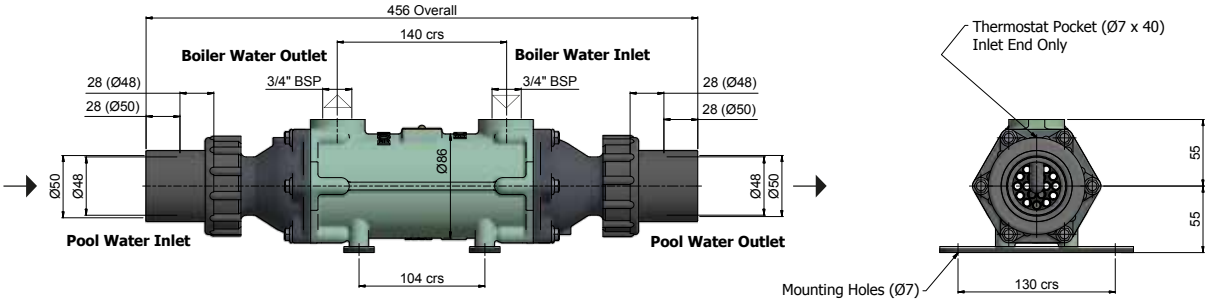

EC120-5113-3

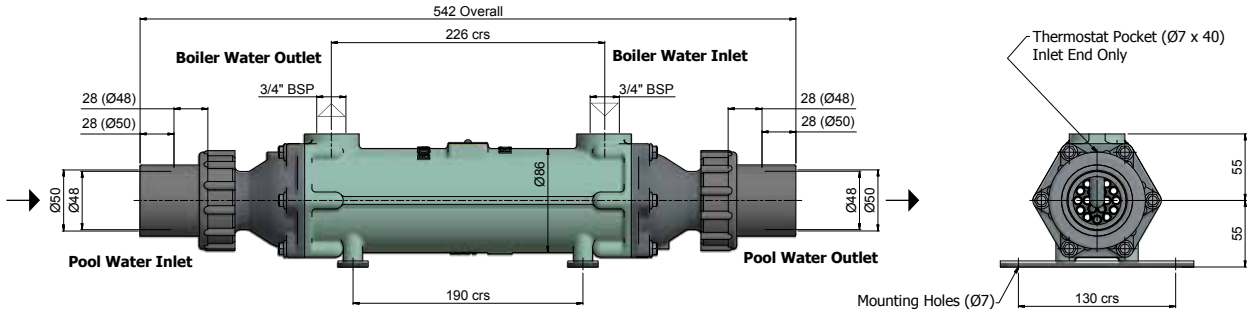

FC100-5114-2

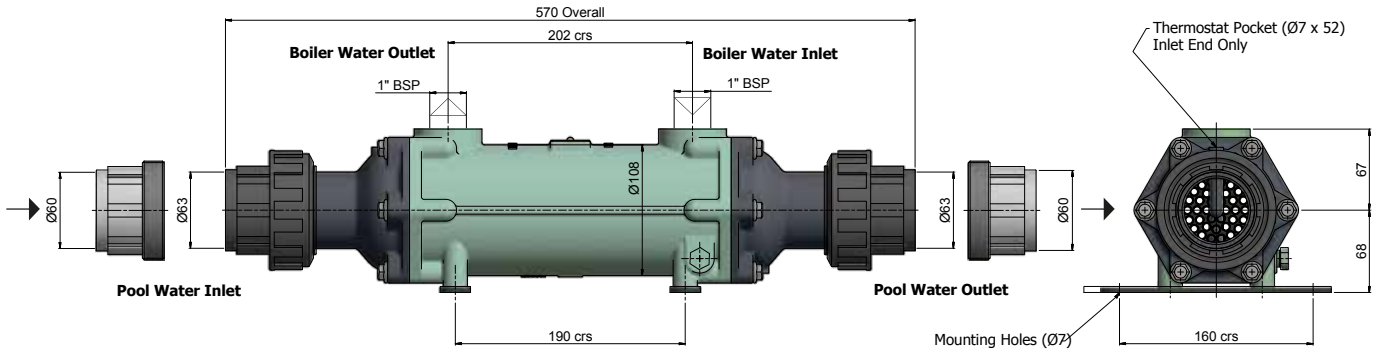

All dimensions in mm.

FG100-5115-2

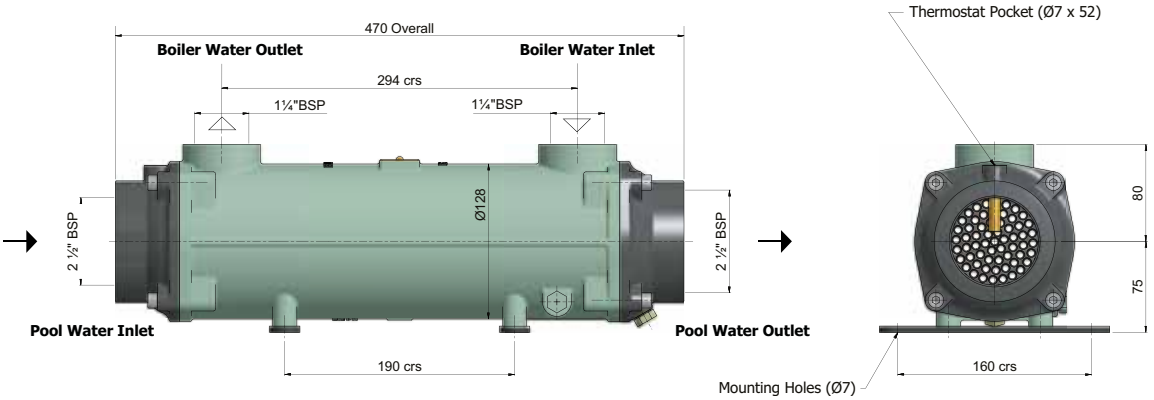

FG160-5115-5

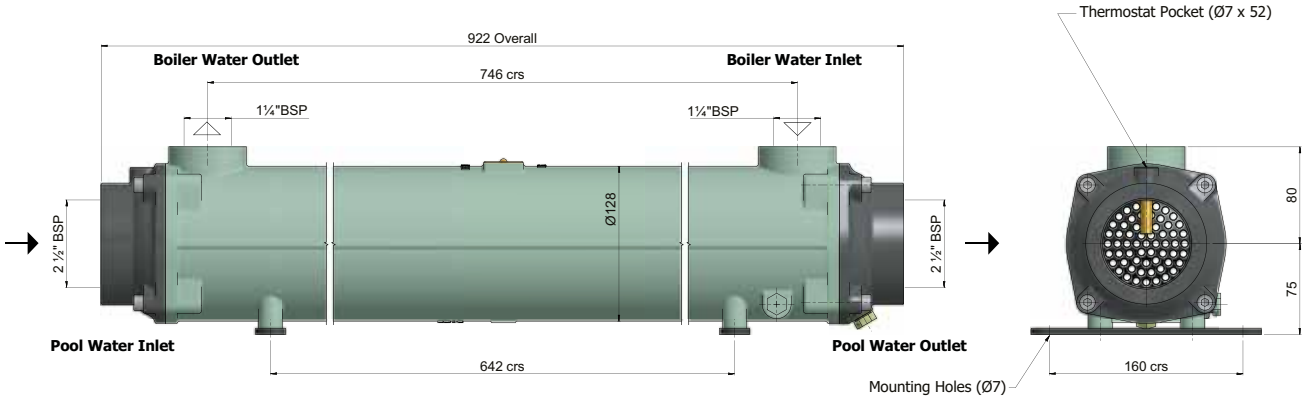

GL140-3708-2

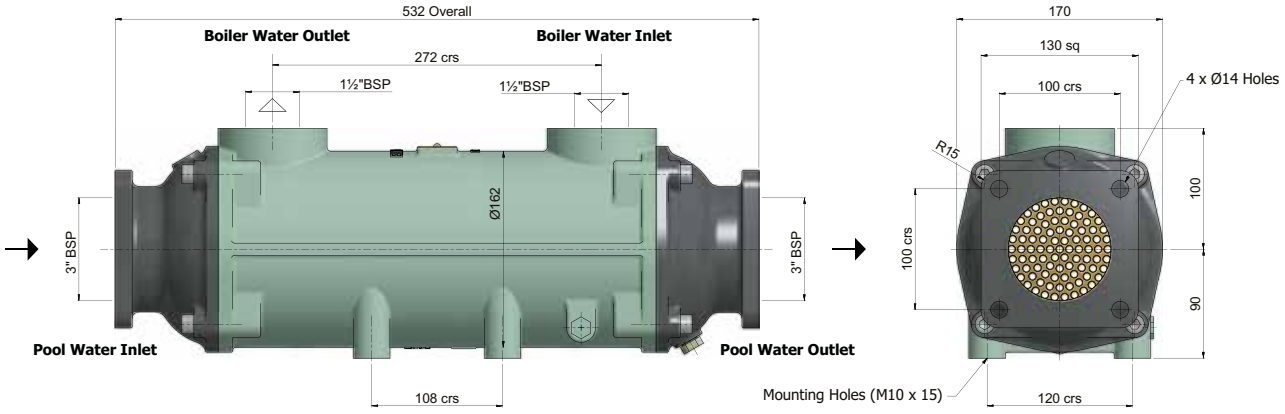

GK190-5117-3

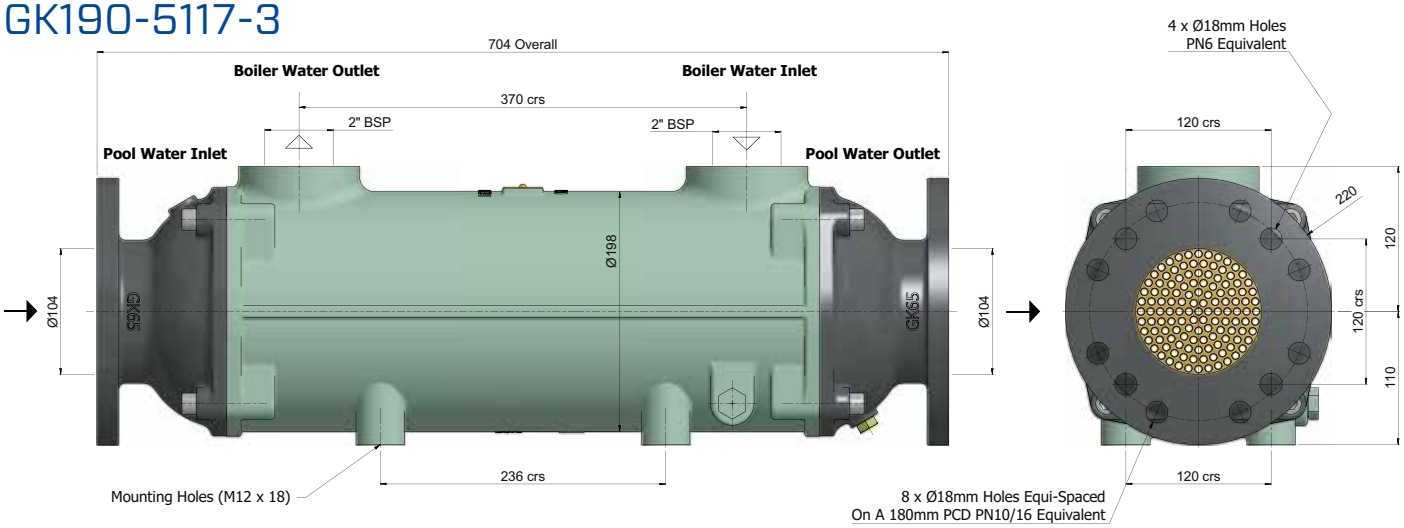

All dimensions in mm.

Flanges to BS EN 1092/1.

JK190-5118-3

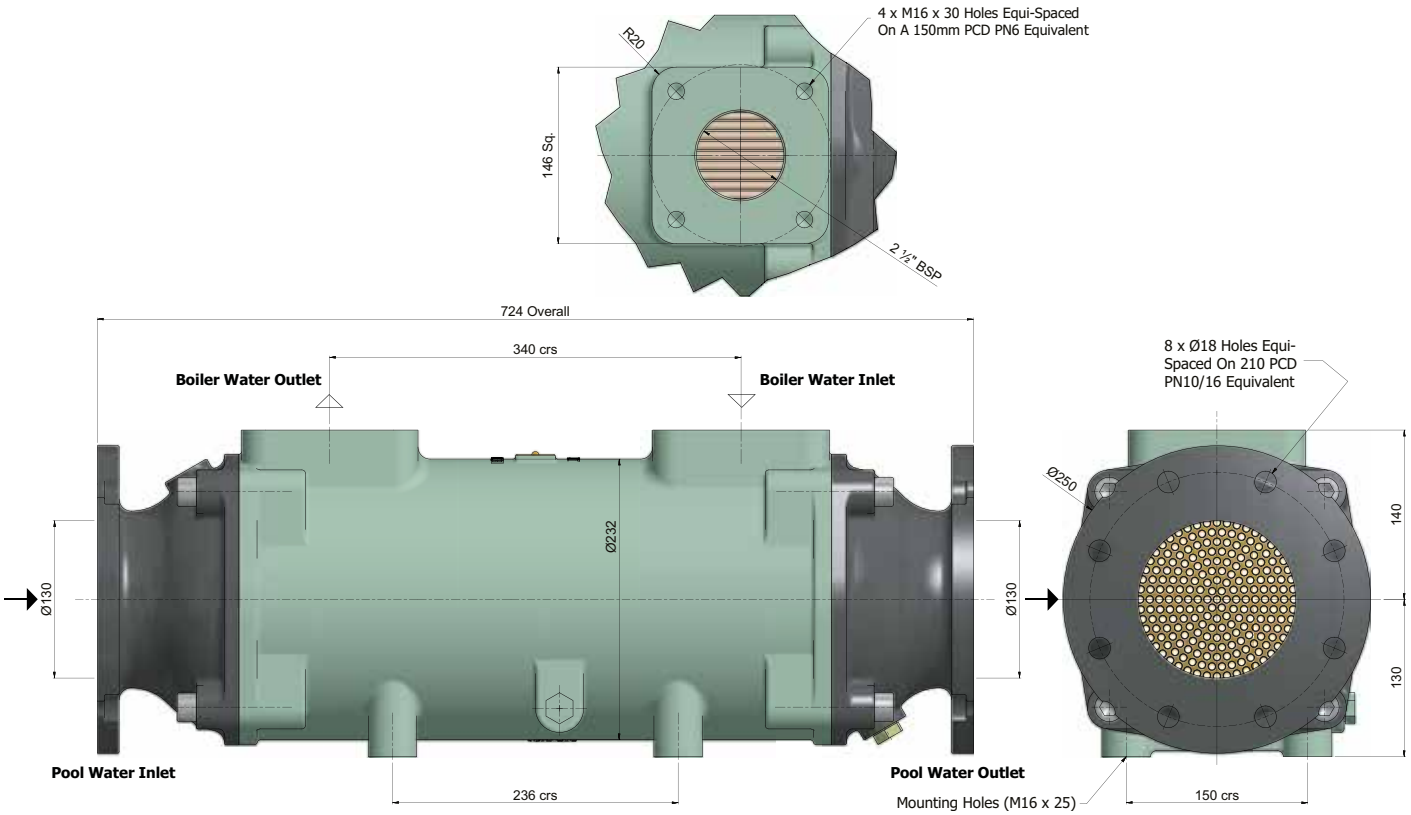

PK190-5119-3

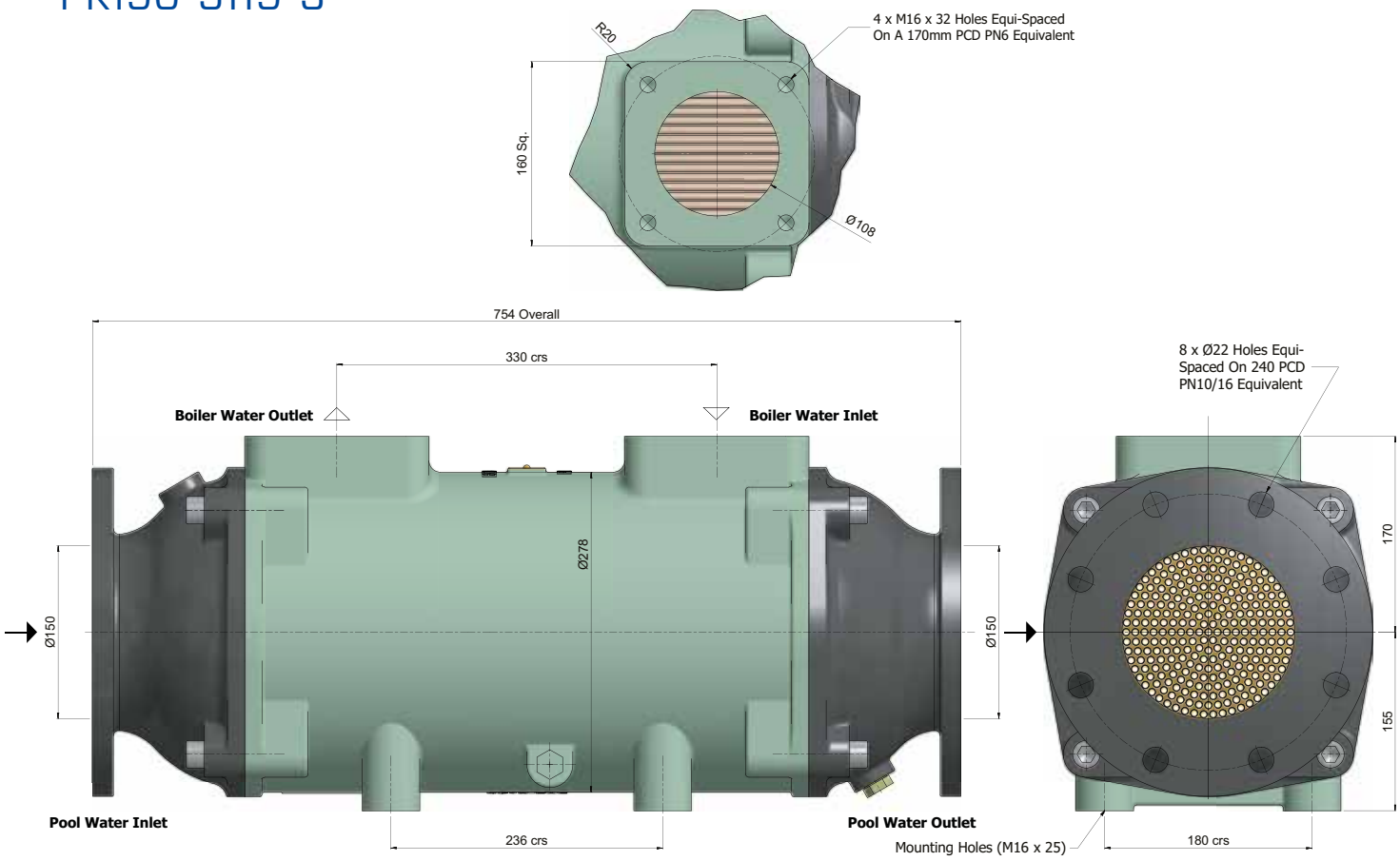

All dimensions in mm.

Flanges to BS EN 1092/1.

BOWMAN®

Swimming Pool Heat Exchangers

for use with solar panels and heat pumps

The table below shows the heat that can be transferred by Bowman units with the water temperature from the solar panels or heat pump being 70°C (158°F), 60°C (140°F) or 45°C (113°F) for various pool capacities and the swimming pool water at 30°C (86°F).

Type	Pool Capacity		Heat Transfer		Solar or Heat Pump Water Flow		Maximum Pool Water Flow		Weight
	m^3	gal	kW	Btu/h	m^3/h	l/m	m^3/h	l/m	kg
Hot Water at 70°C									
EC120-5113-3C/S/T*	50	11,000	30	102,000	1.5	25	6.2	104	5.5 / 5.5 / 4.9
EC160-5113-5C/S/T*	120	26,000	75	256,000	3.0	50	15.0	250	8.5 / 8.5 / 7.3
FC160-5114-5C/S/T*	200	44,000	130	444,000	4.5	76	23.0	380	17 / 17 / 15
FG160-5115-5C/S/T*	300	66,000	200	680,000	6.6	110	29.0	480	29 / 29 / 25
Hot Water at 60°C									
EC120-5113-3C/S/T*	40	8,800	20	68,000	1.5	25	6.2	104	5.5 / 5.5 / 4.9
EC160-5113-5C/S/T*	110	24,000	55	190,000	3.0	50	15.0	250	8.5 / 8.5 / 7.3
FC160-5114-5C/S/T*	180	40,000	96	325,000	4.5	76	23.0	380	17 / 17 / 15
FG160-5115-5C/S/T*	230	50,000	150	512,000	6.6	110	29.0	480	29 / 29 / 25
Hot Water at 45°C									
EC120-5113-3C/S/T*	20	4,400	10	34,000	1.5	25	6.2	104	5.5 / 5.5 / 4.9
EC160-5113-5C/S/T*	52	11,400	27	92,000	3.0	50	15.0	250	8.5 / 8.5 / 7.3
FC160-5114-5C/S/T*	94	20,600	47	160,000	4.5	76	23.0	380	17 / 17 / 15
FG160-5115-5C/S/T*	140	30,800	70	240,000	6.6	110	29.0	480	29 / 29 / 25

*Add the appropriate suffix indicating tube material when ordering these part numbers (C, S or T).
C = Cupronickel S = Stainless steel T = Titanium

N.B. Stainless steel heat exchangers should not be used on pools fitted with salt water chlorinators or salt water pools.

EC120-5113-3

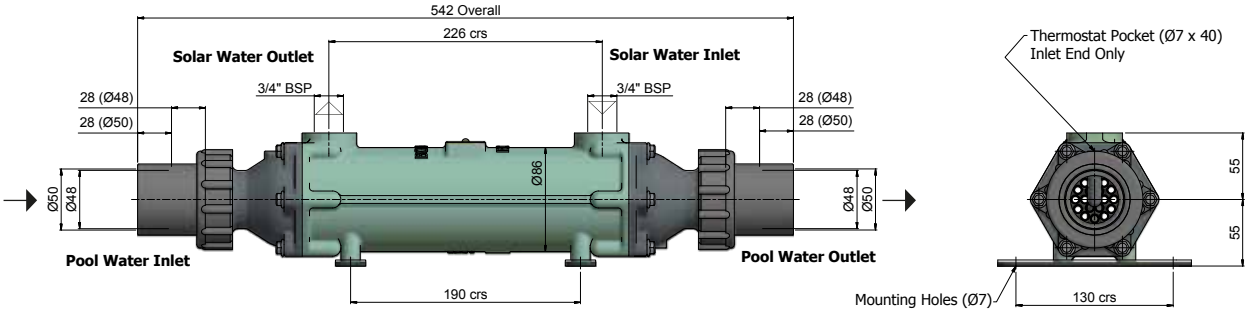

EC160-5113-5

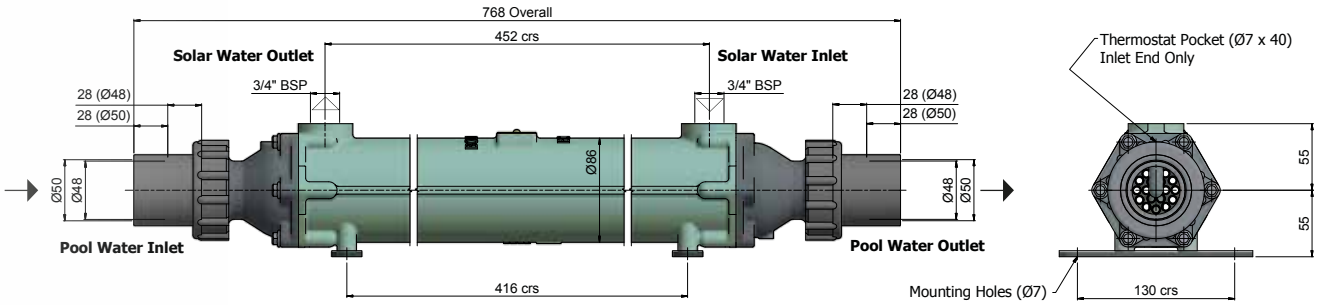

FC160-5114-5

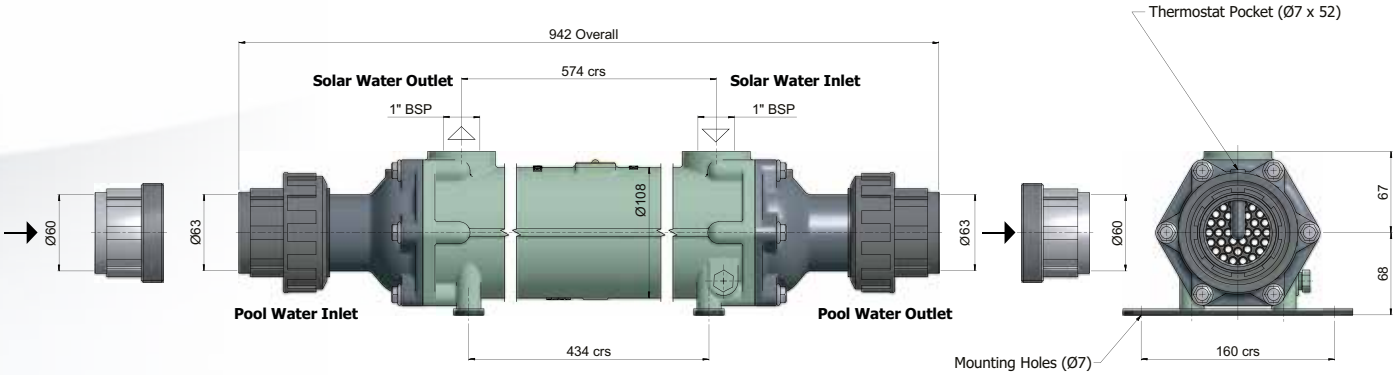

FG160-5115-5

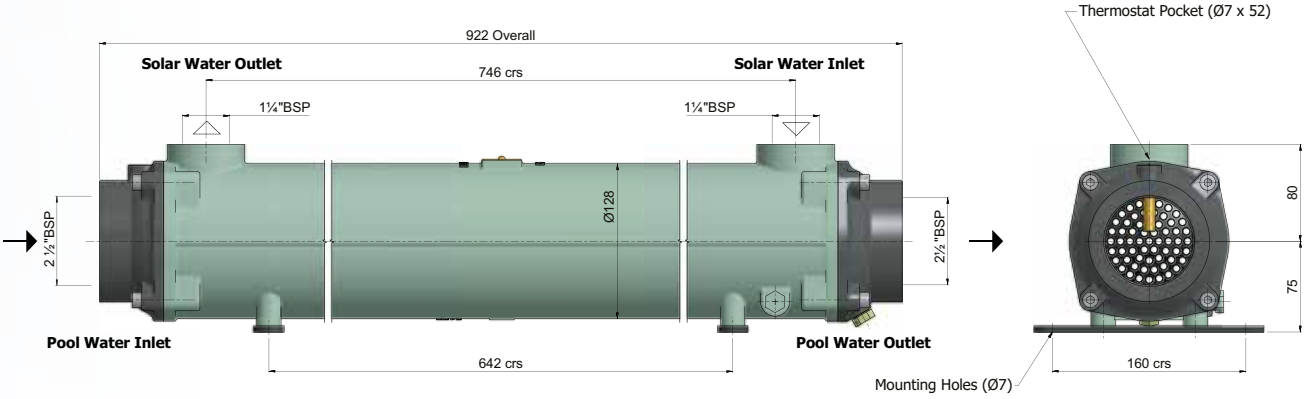

All dimensions in mm.

Flanges to BS EN 1092/1.

BOWMAN®

Replacement Parts

A comprehensive range of replacement parts is available for all swimming pool heat exchangers, as list below.

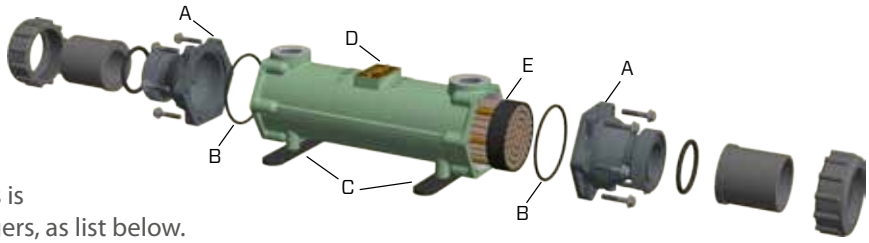

Type	End Cover Assembly (A)	'O' Seals (B)	Mounting Brackets (C)	Body (D)	Tube Stack (E)
EC80-5113-1C EC80-5113-1S EC80-5113-1T	5030-1	AN12NT	5032-1	EC69-5568-1CI	5095-1TNP 5095-1STP 5095-1TIP
EC100-5113-2C EC100-5113-2S EC100-5113-2T	5030-1	AN12NT	5032-1	EC70-4568-2CI	5095-2TNP 5095-2STP 5095-2TIP
EC120-5113-3C EC120-5113-3S EC120-5113-3T	5030-1	AN12NT	5032-1	EC71-4568-3CI	5095-3TNP 5095-3STP 5095-3TIP
EC160-5113-5C EC160-5113-5S EC160-5113-5T	5030-1	AN12NT	5032-1	EC73-4568-5CI	5095-5TNP 5095-5STP 5095-5TIP

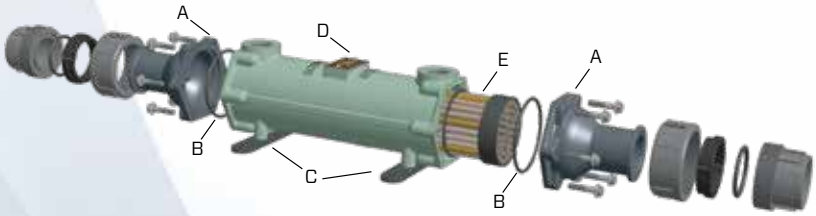

Type	End Cover Assembly (A)	'O' Seals (B)	Mounting Brackets (C)	Body (D)	Tube Stack (E)
FC100-5114-2C FC100-5114-2S FC100-5114-2T	5031	OS46NT	5032-2	FC70-4668-2CI	5096-2TNP 5096-2STP 5096-2TIP
FC160-5114-5C FC160-5114-5S FC160-5114-5T	5031	OS46NT	5032-2	FC73-4668-5CI	5096-5TNP 5096-5STP 5096-5TIP

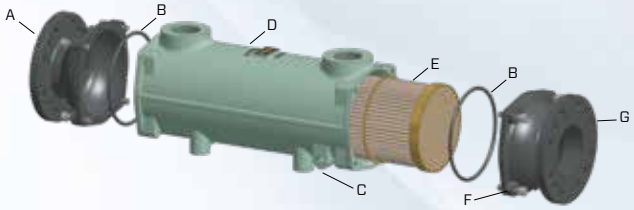

Type	Drain End Cover (A)	'O' Seals (B)	Mounting Brackets (C)	Body (D)	Tube Stack (E)	End Cover Screws (F)	Non Drain End Cover (G)
FG100-5115-2C FG100-5115-2S FG100-5115-2T	FG7-2802CIC-DR	OS52NT	5032-2	FG10-1650-2CI	5090-2TN2P 5097-2STP 5097-2TIP	HS08X35DP	FG7-2802CIC
FG160-5115-5C FG160-5115-5S FG160-5115-5T	FG7-2802CIC-DR	OS52NT	5032-2	FG16-1650-5CI	5090-5TN2P 5097-5STP 5097-5TIP	HS08X35DP	FG7-2802CIC
GL140-3708-2C	GL37-3140CIC-DR	OS63NT	-	GL15-3136NF-2CI6	3447-2TN2B	HS10X40DP	GL37-3140CIC
GK190-5117-3C	GK65-5255CIC-DR	OS69NT	-	GK19-2865NF-3CI7	3448-3TN2B	HS12X50DP	GK65-5255CIC
JK190-5118-3C	JK4-3331CIC-DR	OS74NT	-	JK19-3332NF-3CI8	3450-3TN2B	HS16X70DP	JK4-3331CIC
PK190-5119-3C	PK4-2926CIC-DR	OS81NT	-	PK19-2920HF-3CI0	3449-3TN2B	HS16X70DP	PK4-2926CIC

Whenever an end cover is removed for cleaning or maintenance, a new 'O' seal should be fitted up on re-assembly.

Installation and Maintenance

All Bowman swimming pool heat exchangers must be installed in accordance with the 'Installation, Operation & Maintenance Guide.

Pool Water Flow - The maximum pool water flow rates detailed in the ratings charts must not be exceeded.

Operating Temperature - Heating water must not exceed 110ºC.

Operating Pressure - The maximum working pressure on both sides is 6 bar (87 psi).

Mounting - The heat exchanger can be mounted vertically or horizontally as per the diagram below.

Dosing - If an automatic dosing system is added, it must be installed after the heat exchanger on the return to the pool.

Salt Water - Stainless steel heat exchangers should not be used on pools fitted with salt water chlorinators or salt water pools.

Titanium tube stacks

Titanium is the perfect material for swimming pool heat exchangers. It can be used with any type of pool water- including saline and with salt water chlorinators - resisting attack from aggressive chemicals indefinitely.

Titanium also eliminates the possibility of 'galvanic reaction' between two dissimilar materials, a major cause of tubestack erosion which can lead to premature failure of the heat exchanger in certain conditions.

Titanium heat exchangers offer even greater heat transfer efficiency, due to their ability to operate at higher flow rates than other materials. In some installations, this allows a smaller sized unit to be used, providing a useful cost saving.

NEW 'Universal Fit' end covers for EC units

All EC units are now supplied with the new 'Universal Fit' composite end covers, which are specially designed for use with either 1.5" nominal pipe size (48mm O/D) or metric 50mm O/D pool pipework. A new 'socket union' component enables either diameter to be accommodated, making installation even easier. For more information, contact our technical sales team and ask for the product bulletin.

GUARANTEED **10** YEARS

Bowman titanium heat exchangers have a full 10 year guarantee on all titanium material in contact with pool water.

Horizontal Mounting

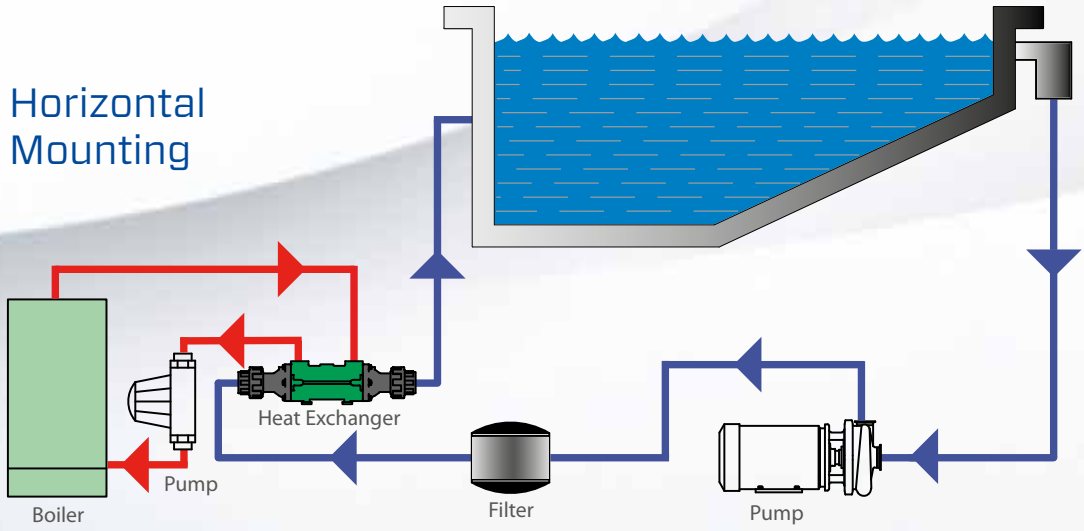

Vertical Mounting

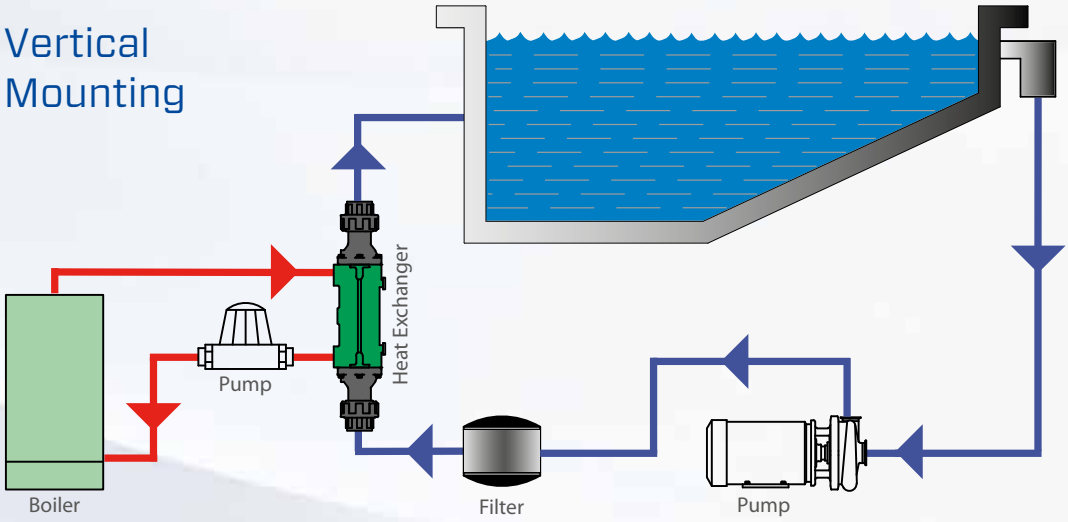

All material contained in this brochure is the intellectual property of EJ Bowman (Birmingham) Ltd. It is protected under copyright and may not be reproduced without prior written consent of the company.

A world of applications

Wherever you can install a swimming pool, you can enjoy the high performance and energy efficiency of a Bowman heat exchanger. We've been involved in an incredibly diverse range of projects around the world – just take a look at these examples.

In Russia - Bowman heat exchangers are used in the pool heating system in the Russian Spa Resort of Sochi, the site of the Winter Olympics 2014.

Bowman units are at the heart of a new cogeneration system at Leichhardt Park and Aquatic Centre (LPAC) in New South Wales, **Australia**, where they're helping to improve the centre's energy efficiency and reduce annual energy costs and greenhouse gas emissions.

The KP Club resort, Yorkshire, **UK,** is using Bowman products in the renewable heating system for the hot tubs in its luxury lodges. By installing a biomass boiler and heat exchangers instead of conventional electric heating, the club is saving thousands of pounds a year on its energy bills.

The famous outdoor pool complex at **Moree Hot Artesian Spa in the Australian Outback** relies on Bowman titanium heat exchangers to meet the demands of the unique artesian water supply and massive fluctuation in outside air temperatures.

Bowman is now established as the 'leading brand' for swimming pool heat exchangers. With tens of thousands of units operating reliably and efficiently throughout the world, you can have complete confidence when you specify Bowman heat exchangers for your pool.

BOWMAN®

100 YEARS OF HEAT TRANSFER TECHNOLOGY

group mdt

www.mdtco.**com** **info@**mdtco.**com**

EJ Bowman (Birmingham) Ltd, reserve the right to change specifications without prior notice.

E